| REV. | ECN NO. | LOCAS. | DESCRIPTION | DATE | DESIGN |
|---|---|---|---|---|---|
| A0 | | | RELEASE TO CUSTOMER | 150116 | RYAN |
| | | | | | |

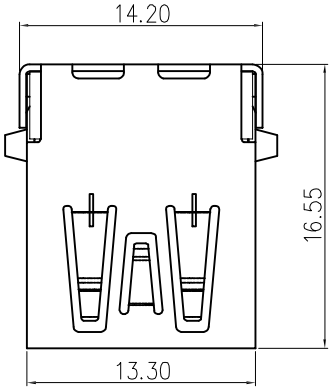


| Pin Number | Signal Name |
|---|---|
| 1 | VBUS |
| 2 | D- |
| 3 | D+ |
| 4 | GND |
| 5 | SSRX- |
| 6 | SSRX+ |
| 7 | GND |
| 8 | SSTX- |
| 9 | SSTX+ |
| Shell | Shield |

Remark:
1.MATERIAL:
1.1 Housing:thermoplastic plastics.
1.2 terminals:Copper Alloy
1.3 Shell:Copper Alloy/SPCC.
2.characteristics:
2.1 Rating Voltage : 30V AC.
2.2 Rating Current:PIN1&PIN4(Vbus&Correponding ground PIN)
1.8A MAX Other PINS 0.25A min.
2.3 Contact Resistance:PIN1&PIN4:30 mΩ MAX. Other PINS: 50 mΩ
2.4 Insulation Resistance:100 MΩ MIN.
2.5 Withstanding Voltage:AC 100V between adjacent contacts
2.6 Mating force 3.57Kgf MAX(35N MAX)
2.7 Extraction force:1Kgf Min(9.8N Min)
2.8 Life test:1500Cycles MIN.
2.9 Temperature Range −30℃~+80℃.

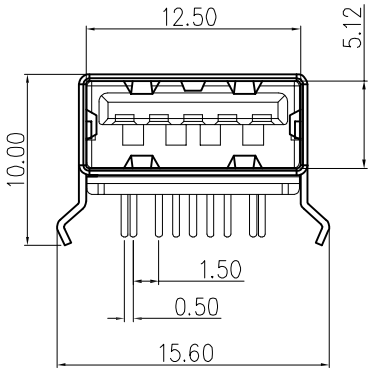


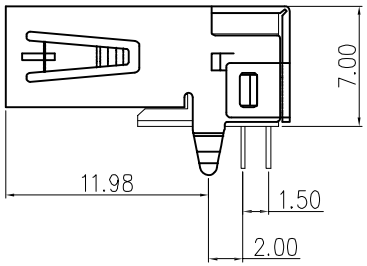


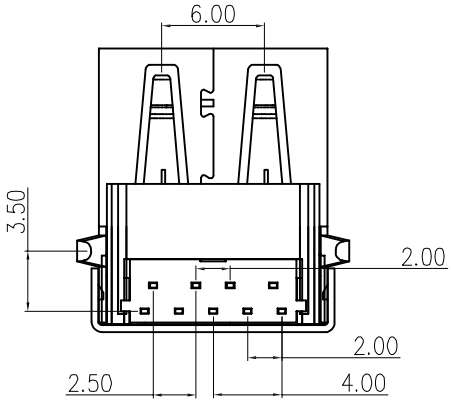


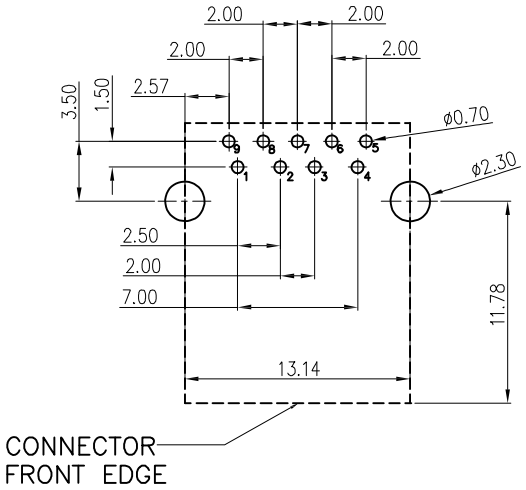


Recommened P.C.B Layout
General Tolerance±0.05

| DIM | TOL | DIM | TOL |
|---|---|---|---|
| X. | ±0.30 | X°. | ±4.0° |
| X.X | ±0.25 | X.X° | ±3.0° |
| X.XX | ±0.20 | X.XX° | ±2.0° |
| X.XXX | ±0.10 | X.XXX° | ±1.0° |

THIS DRAWING CONTAINS INFORMATION THAT IS PROVIDED BY LASTAR TECHNOLOGY AND SHOULD NOT BE USED WITHOUT WRITTEN PERMISSION

LASTAR
Lastar Technology CO.,LTD
TEL:0755-27157971 FAX:0755-27157976 Http://www.lsdconn.com

| | | | | |
|---|---|---|---|---|
| DRAW NO. | 412-B6C-0922 | DATE | DRAW NAME: | USB 3.0 AF DIP90度 平口 |
| DESIGN | RYAN | 150116 | P/N NO. | USB-412-B6C-0922 |
| CHECK | WANGCM | 150116 | FILE: | |
| APPROVED | HUYX | 150116 | MODEL: | |
| UNIT: mm | SHEET: N/A | | REV. A0 | SCALE N/A |