CATEGORY	DESCRIPTION	P/N #
CONNECTOR	Modular Jack Assehdly,1X1,Shielded, Shielded,LED,Dffset,2.9H,TAB Dovn	MJ88-BX11-RV3L3

REV.	ECN NO	DESCRIPTION	REVISED	DATE
R01	————	New Release	kelly	2012.05.12

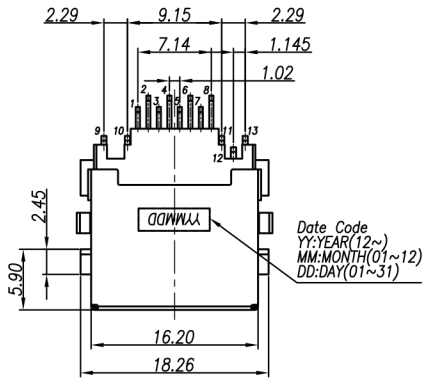

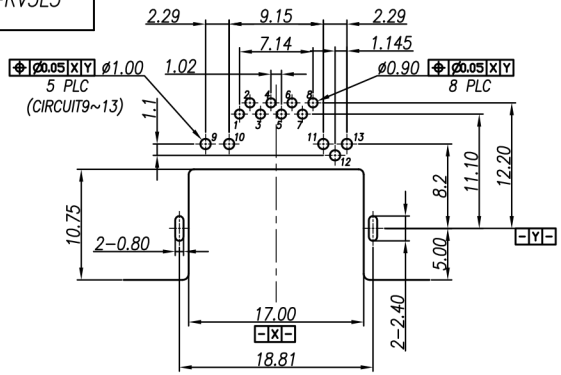

TOLERNACE: ±0.05, THICKNESS: 1.2mm
RECOMMENDED PCB LAYOUI

MJ88-BX11-RV3L3

See Table 1

X	Contact Plating
1	Au 1u" Plating on contact area,Tin Plating 100u"Min on solder tails
2	Au 5u" Plating on contact area,Tin Plating 100u"Min on solder tails
3	Au 15u" Plating on contact area,Tin Plating 100u"Min on solder tails
4	Au 30u" Plating on contact area,Tin Plating 100u"Min on solder tails

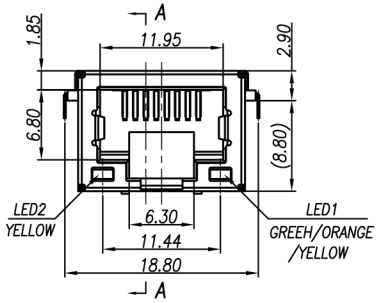

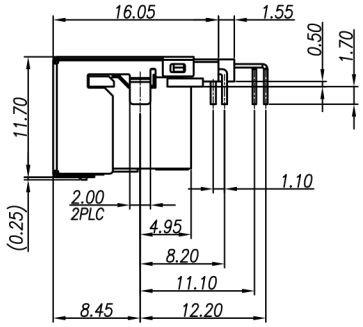

SPECIFICATIONS :

1.RJ ELECTRICAL CHARACTERISTICS
- 1-1: VOLTAGE: 150V AC RMS
- 1-2: CURRENT RATING: 1.5A
- 1-3: CONTACT RESISTANCE: 30mΩ MAX.
- 1-4: INSULATION RESISTANCE: 500MΩ MIN.
- 1-5: DIELECTRIC WITHSTAND VOLTAGE: 1000V AC
- 1-6: OPERATION TEMPERATURE: -40°C~80°C
- 1-7: DURABILITY: 500 MATING CYCLES MIN.

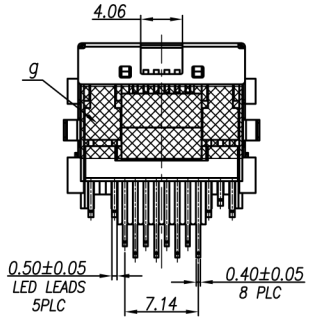

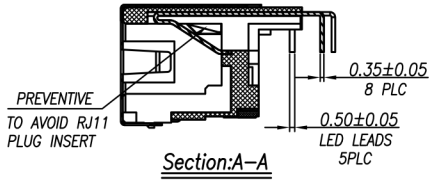

Section:A-A

LED COLOR			
	NOOE	COLOR	
LED 1	11(-) 12(+)	GREEN	11 13 12
	13(-) 12(+)	ORANGE	
	11(-) 13(-) 12(+)	YELLOW	
LED 2	9(+) 10(-)	YELLOW	9 10

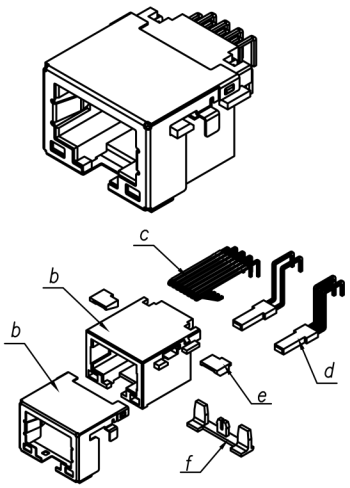

3D VIEW

NO.	PART NAME	Q'TY	MATERIAL	PLATING & COLOR	Remark
g	Mylar	1	PI	Black	
f	Cover	1	LCP GF30% UL94V-0	Black	
e	Stopper	2	LCP GF30% UL94V-0	Black	
d	LED	2	EXPOXY&STEEL	NI	
c	Terminal	8	C5191R-H T=0.35mm	See Table 1	
b	Housing	1	LCP GF30% UL94V-0	Black	
a	Shell	1	C2680 T=0.20mm	NI	

贵州省合曜电子科技有限公司
Connector GuiZhousheng HeYao Electronic Technology Co.,Ltd

UNLESS OTHERWISE SPECIFED TOLERANCES

DECIMALS: X :±0.5, X.X :±0.3, X.XX :±0.2
ANGLES: X :±2°, X.X :±1°

SCALE:1/1	UNIT: mm		DWG.NO:
SIZE: A4	PAGE: 1OF1	REV:R01	

APPROVED BY	CHECKED BY	PREPARED BY
tony	bill	kelly

CUSTOMER COPY