REV.	ECN NO. / DESCRIPTION	DATE
1A	RD16101	11/24'20

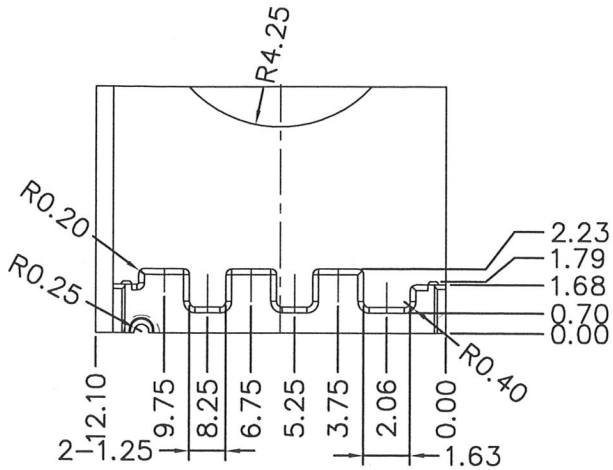

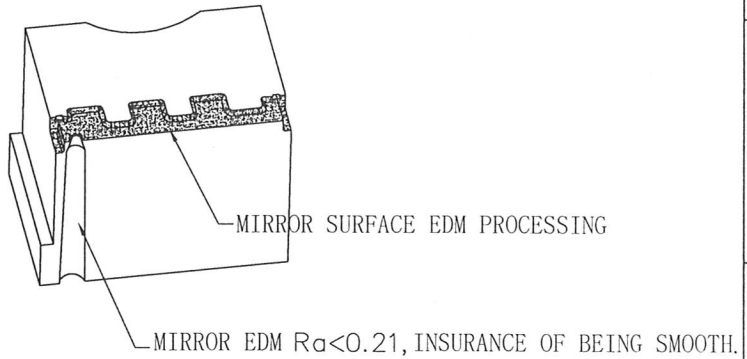

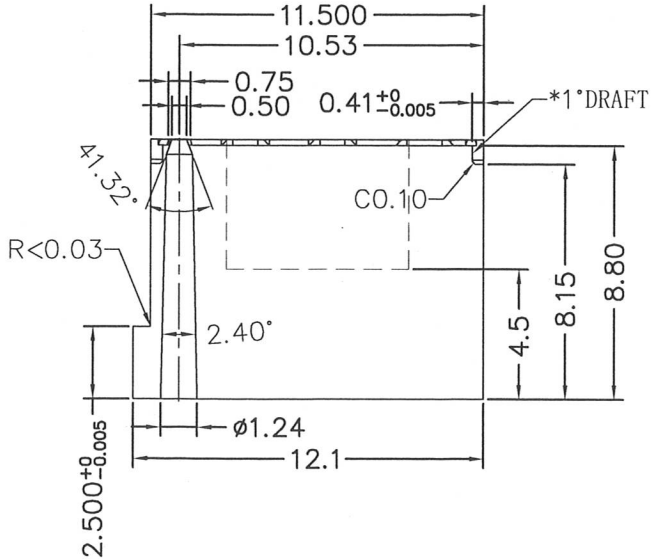

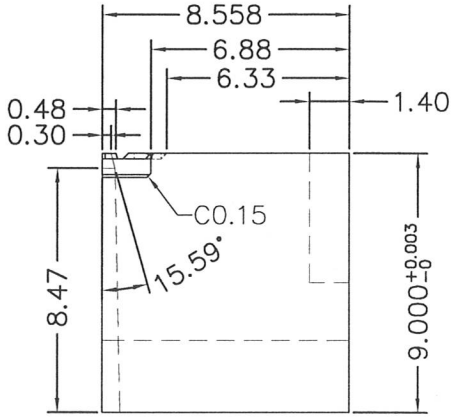

GENERAL TOLERANCES UNLESS SPECIFIED		DRAWN BY	CHECKED BY	APPROVED BY	Q'TY	FINISH	MATERIAL	TITLE	
.X ±0.05	X.°±1°	??			8	HRC50~53°	SKD61	X792 HDMI IM TOP 9PIN INJECTION CAVITY INSERT	MOLDMAN MOULD TECHN. CO.LTD
.XX±0.01	.X°±0.5°				SIZE	UNITS	PART NO.	DWG NO.	SHEET / SCALE / REV
.XXX ±0.005	.XX°±0.1°	11/24'20			A4	MM	BHDM0203-P001A	035	1/1 / 1:1 / 1A
.XXXX ±0.0002	.XXX°±0.05°								