APPEARANCE

SOD123

PIN CONFIGURATION

Pin configuration (Top view)

Descriptions

The APES12H55-12 is a Uni-directional transient voltage suppressor (TVS) to protect sensitive electronic components from electrostatic discharge (ESD). It is particularly well-suited for cellular phones, PMP , MID, PDA, digital cameras and other electronic quipment. The XYES12H55-12 is safely dissipating ESD strikes to meet the ESD immunity testing of IEC61000-4-2 (±30KV).

The APES12H55-12 is available in SOD-123 package. Standard products are Pb-free and Halogen-free.

Order information

Device	Package	Shipping
APES12H55-12	SOD-123	3000/Tape&Reel

Electrical Parameters (T=25℃)

Symbol	Parameter
V_{RWM}	Reverse Stand-off Voltage
I_R	Reverse Leakage Current @ V_{RWM}
V_{BR}	Reverse Breakdown Voltage @ I_T
I_T	Test Current
IPP	Reverse Peak Pulse Current
V_C	Clamping Voltage @ IPP
I_F	Forward Current
V_F	Forward Voltage @ IF

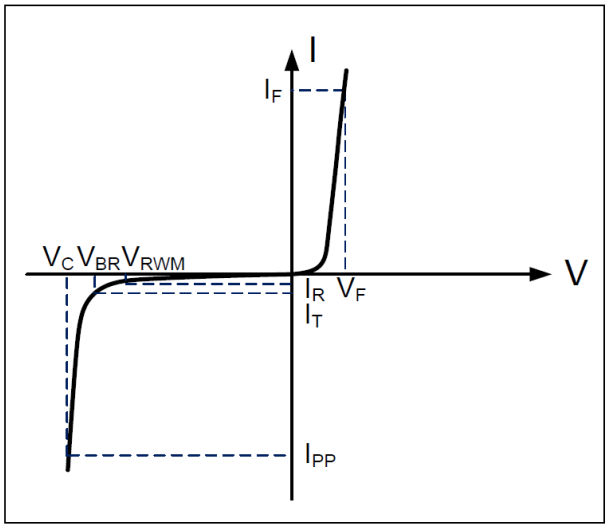

Absolute maximum ratings

Parameter	Symbol	Rating	Unit
Peak pulse power (tp = 8/20μs)	Ppk	1500	W
Peak pulse current (tp = 8/20μs)	I_{PP}	55	A
ESD according to IEC61000-4-2 air discharge	V_{ESD}	±30	kV
ESD according to IEC61000-4-2 contact discharge		±30	kV
Junction temperature	T_J	150	℃
Operating temperature	T_{OP}	-55~125	℃
Storage temperature	T_{STG}	-55~150	℃

Electronics characteristics (Ta=25℃)

Parameter	Symbol	Condition	Min	Typ	Max	Units
Reverse Stand-off Voltage	VRWM				12	V
Reverse Breakdown Voltage	VBR	It=1mA	13.5	14.2	15.5	V
Reverse Leakage Current	IR	VRWM=12V			0.1	uA
Clamping Voltage	VC	Ipp=55A,tp=8/20us			28	V
Junction Capacitance	Cj	VR=0V,f=1MHz		370		pF

Typical characteristics (Ta=25℃)

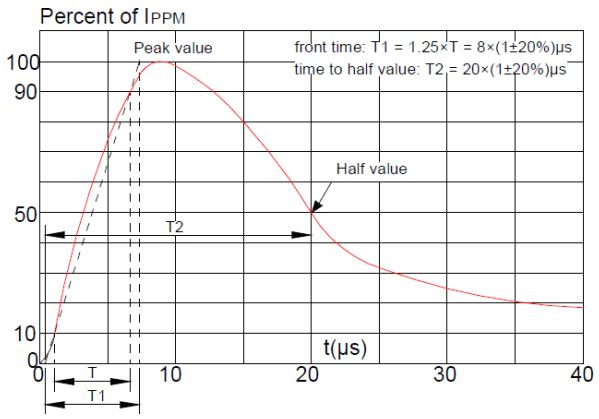

Pulse Waveform (8/20us)

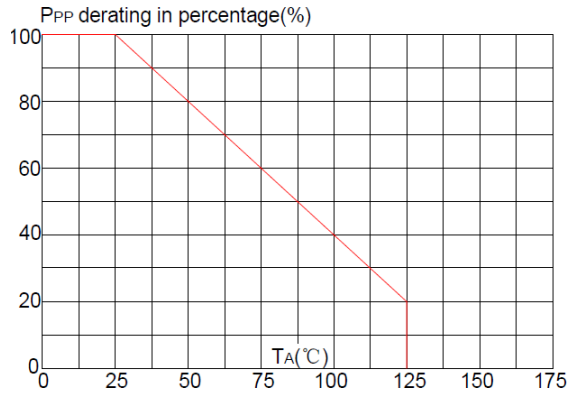

Pulse Derating Curve

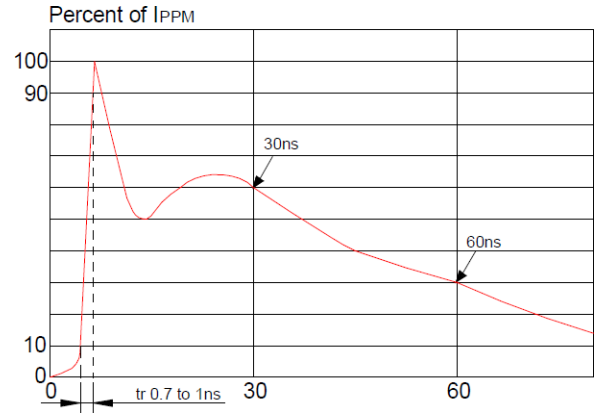

ESD Clamping(8kV Contact Discharge)

PACKAGE OUTLINE DIMENSIONS(SOD-123)

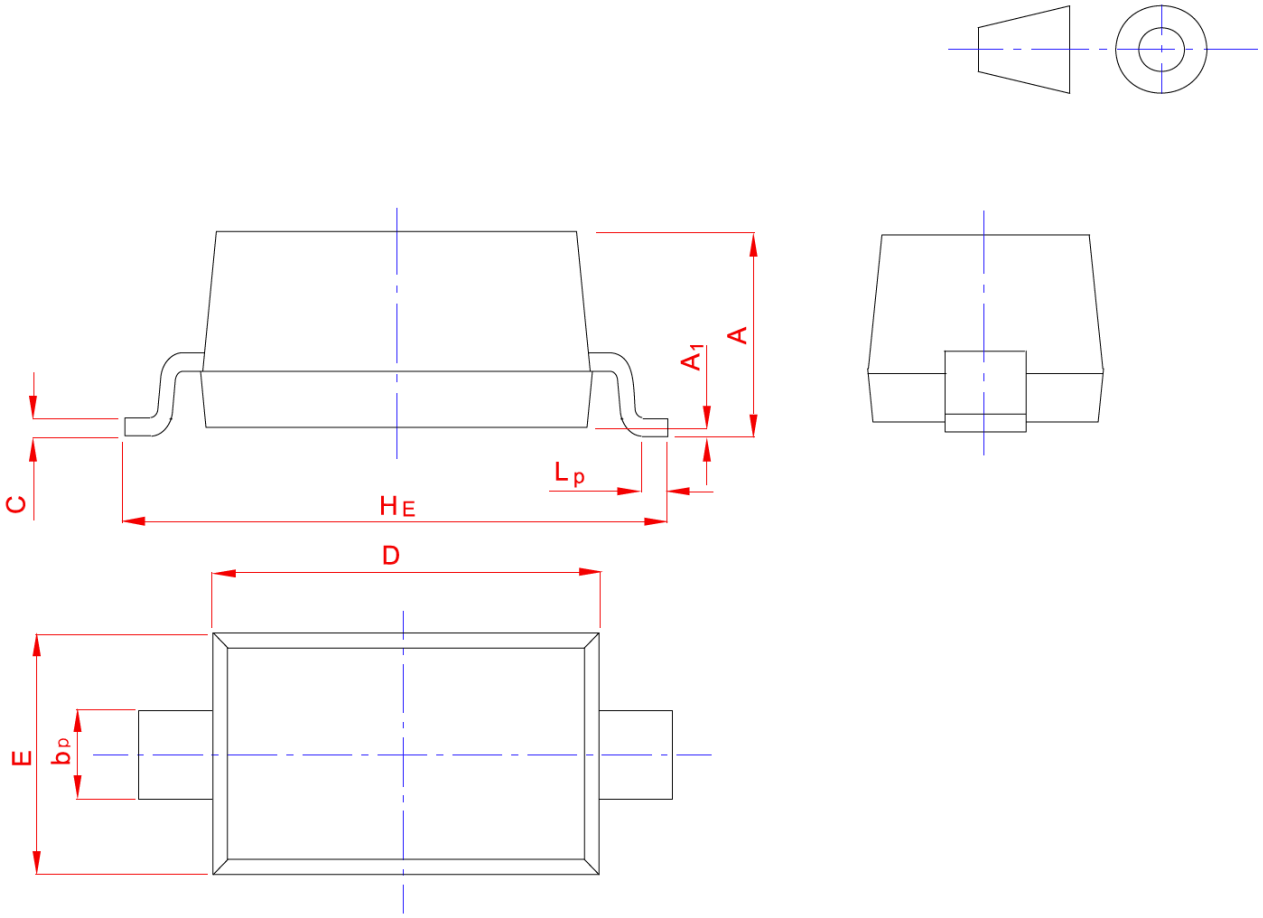

UNIT	A	bp	C	D	E	HE	A1	Lp
mm	1.20 0.90	0.60 0.50	0.135 0.100	2.75 2.55	1.65 1.55	3.85 3.55	0.10 0.01	0.50 0.20

Note:
This recommended land pattern is for reference purpose only.